How the RoSa can seamer works

The machine is designed to seal glass jars with SKO-82 type metal lids (82 mm).

To bring the machine to the start position, press the **UP** button until you hear the ratchet click. This means the **pressure roller** has moved as far as possible from the centre of the **pressure cup**, and the machine can be placed freely on the jar lid.

When you press the **DOWN** button, the lid is seamed onto the glass jar: the **pressure roller** rotates and gradually moves towards the centre. After 9 turns there is a distinctive click signalling that the lid is sealed.

The general view and controls of the machine are shown in the figure:

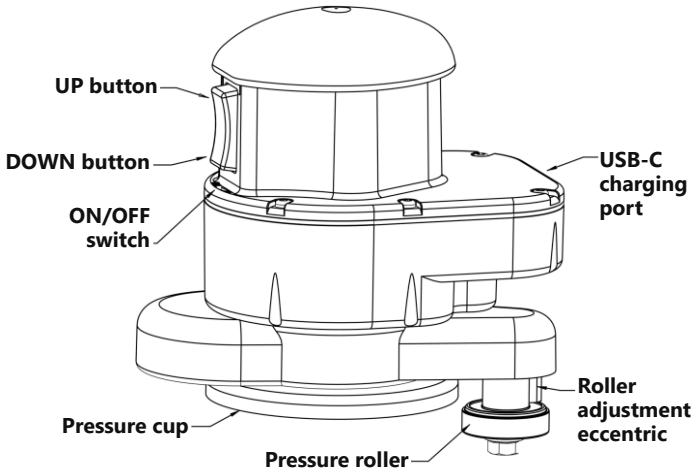

Operating the machine

Charge the machine fully before use (see *Charging the machine*).

Set the **ON/OFF switch** to **ON**.

WITHOUT PLACING THE MACHINE ON A JAR, hold it in one hand as shown in the figure.

To bring the machine to the start position, press and hold the **UP** button until the ratchet clicks. Release the button.

The machine is ready for work.

To avoid injury, do not touch the rotating parts of the mechanism with your hands.

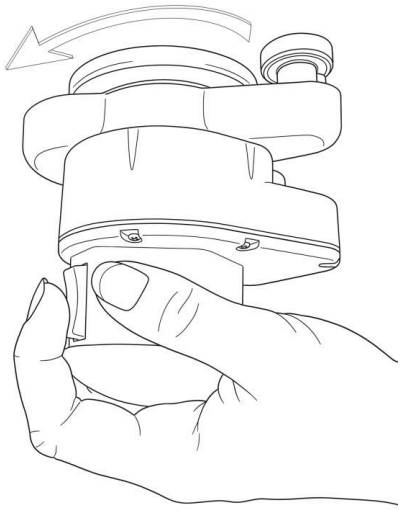

Place the jar on a flat, non-slip surface. Cover the jar with a lid, then place the machine on the lid so that the **pressure cup** sits flat on the whole surface of the lid.

Pressing the machine onto the lid with sufficient force, press and hold the **DOWN** button. After 9 turns of the mechanism you will hear a distinctive click indicating that seaming is complete.

Release the button.

To return the machine to the start position, press the **UP** button and wait for the ratchet sound. Release the button.

The machine is ready to seal the next jar.

If the machine stops while sealing a jar, the batteries are fully discharged. Charge the batteries fully (see *Charging the machine*).

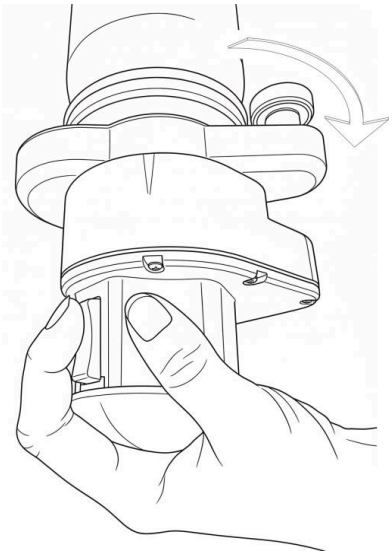

Charging the machine

Set the **ON/OFF switch** to **OFF**. Connect the USB-C cable. The blue-and-red LED is on — charging is in progress. The red LED is on — charging is complete. A full charge takes about 2 hours.

A full charge is enough to seal at least 300 lids.

Do not operate the machine while it is charging!

Store the machine switched off (**ON/OFF switch** in the **OFF** position).

The machine contains electronic components and lithium batteries. Do not operate the machine with wet hands! To avoid damage, do not let water get inside the machine. Do not wash the machine in a dishwasher or immerse it in water. Use wipes to clean the plastic and metal parts of the machine.

Do not let children use the machine!

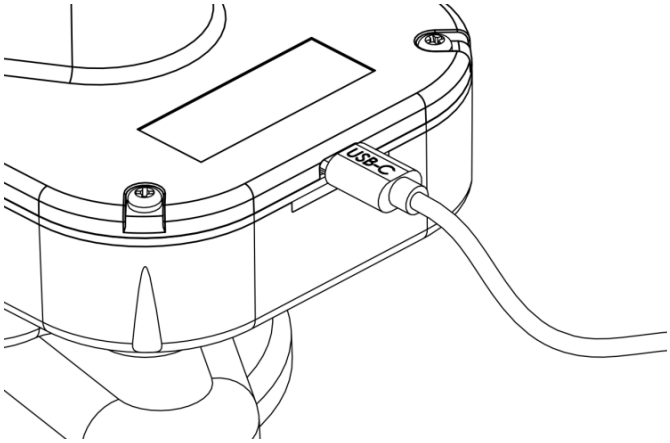

Maintenance

If the machine stops while sealing a lid, it needs to be charged.

Pressure roller adjustment: the machine is supplied with the **pressure roller** adjusted for SKO-82 lids. However, if the lid is not sealed tightly enough after seaming, or the **pressure roller** touches the glass rim of the jar while rotating, you can adjust the **pressure roller** yourself:

1. Loosen the **pressure roller** nut to release the **eccentric** (figure 1).

2. Move the **eccentric** lever to decrease or increase the roller pressure (figure 2).

3. Holding the **eccentric** lever in place by hand, tighten the nut (figure 3).

1

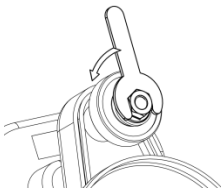

2

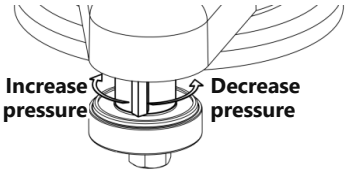

3



Safety instructions

The machine uses lithium batteries. It is prohibited to use or store the machine at temperatures above 40 °C, to open or disassemble the machine, or to expose it to direct sunlight, water or detergents.

Used lithium batteries are a special type of waste; dispose of them in accordance with the applicable regulations.

The machine must not be used by children or by persons who have not read this manual.

Storage

Store and use the machine in a dry place at room temperature. Do not store the machine in a damp room or together with substances that cause corrosion or damage.

Warranty

The warranty period is 12 months from the date of sale, but not more than 24 months from the date of manufacture. The warranty does not cover cases where storage and operating rules have been violated, or mechanical damage.

For warranty and other questions, email: **LTD.PoCa@yandex.ru**

For more information and videos on using the machine, visit our website: **www.zakatka-rosa.ru**

Quality control mark

Date of manufacture __.__.____ Date of sale __.__.____

Seller's stamp